White Cliffs Top+U/Mnt Basin Only 1200mm

Product Image

Technical Specification

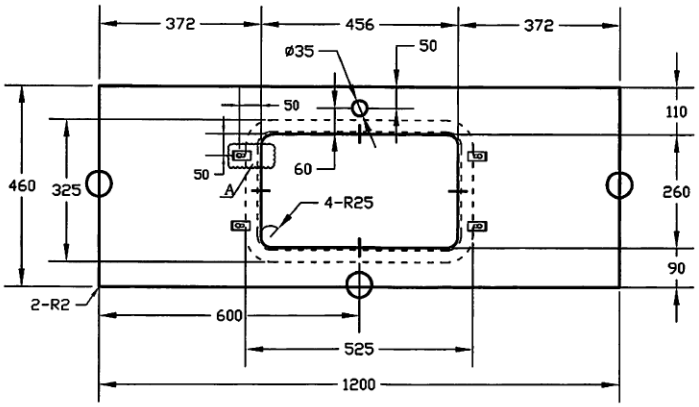

Description

White Cliffs Top+U/Mnt Basin Only To Suit 1200mm Neko Vanity (Centre Bowl) 1TH

NV217055 **White Cliffs**

Attributes

- Quartz stone top
- Attached with U/M ceramic basin
- With overflow
- 7 years replacement product 1 year parts and labour

*All dimensions are in millimeters and are subject to normal manufacturing variations. Actual dimensions should be checked prior to installation. Neko pursues a policy of continuing improvement in design and performance of its products. The right is therefore reserved to vary specifications without notice.