Polymarble Top 900mm

Technical Specification

*Tap not included

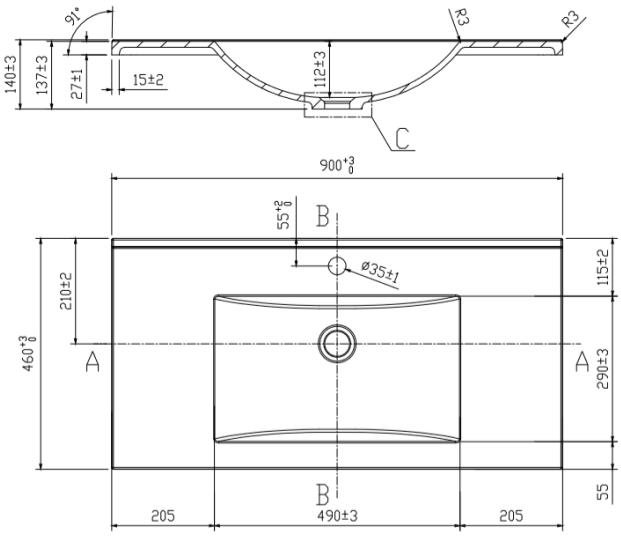

Description

Polymarble Top Only to Suit 900mm Neko Vanity 1TH

NV212210 White

Attributes

- 27mm thickness
- Gloss White Finish
- Require 32mm waste (not included)
- No overflow

*All dimensions are in millimeters and are subject to normal manufacturing variations. Actual dimensions should be checked prior to installation. Neko pursues a policy of continuing improvement in design and performance of its products. The right is therefore reserved to vary specifications without notice.